JAGTECH
Preferred Technology Partner

PRODUCT DESCRIPTION

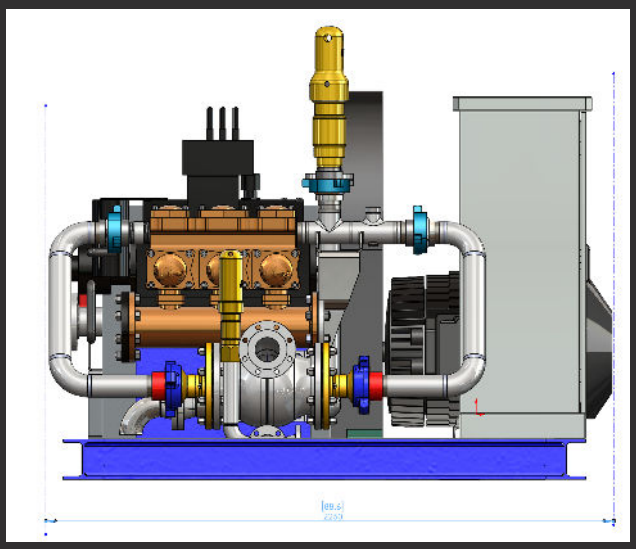

Dual Shear Gun Power Unit

JAGTECH presents a new Plug and Play unit for high efficent mud and fluid conditioning that performs mixing and shearing in one low noise skid or container module with eletcric Triplex pump driver.

PREFACE:

Appropriate drilling fluid properties for optimal drilling progress with immediate stable viscous parameters during drilling operations. Freshly sheard drilling fluid can be applied directly into the well operation when this shear gun is implemented on the rig. Expected reduction in wellbore construction time due to avoiding fluid circulation in the well only to condition the drilling fluid.

BENEFITS:

- Double set of shear nozzles
- Easy changeable nozzles
- High pressure inlets
- Low pressure and velocity outlet
- For oil and water-based mud
- Low noise and Low wear
- Additive inlet nozzles
- Fluid impact mixing
- ATEX Approved
- Frequency Drive (VFD)

OPTION:

- Multiple shear nozzle sizes
- Standard or customized high pressure inlet connections
- Standard or customized high pressure outlet connection
- Wolfram carbide lined or ceramic inner tube
- Wolfram carbide or ceramic nozzles
- High Pressure configuration 120 bar @ 1000 l/min
- Medium Pressure confguraton 50 bar @ 1000 l/min
- Fixed Instalation or Z-015 Rental unit
- Skid or Container module with Fire and safety

D.S.G
DUAL SHEAR GUN

PATENT:
NO 20190161

We deliver innovative
and customer specified technologies
for the oil and gas industry.

JAGTECH

Preferred Technology Partner

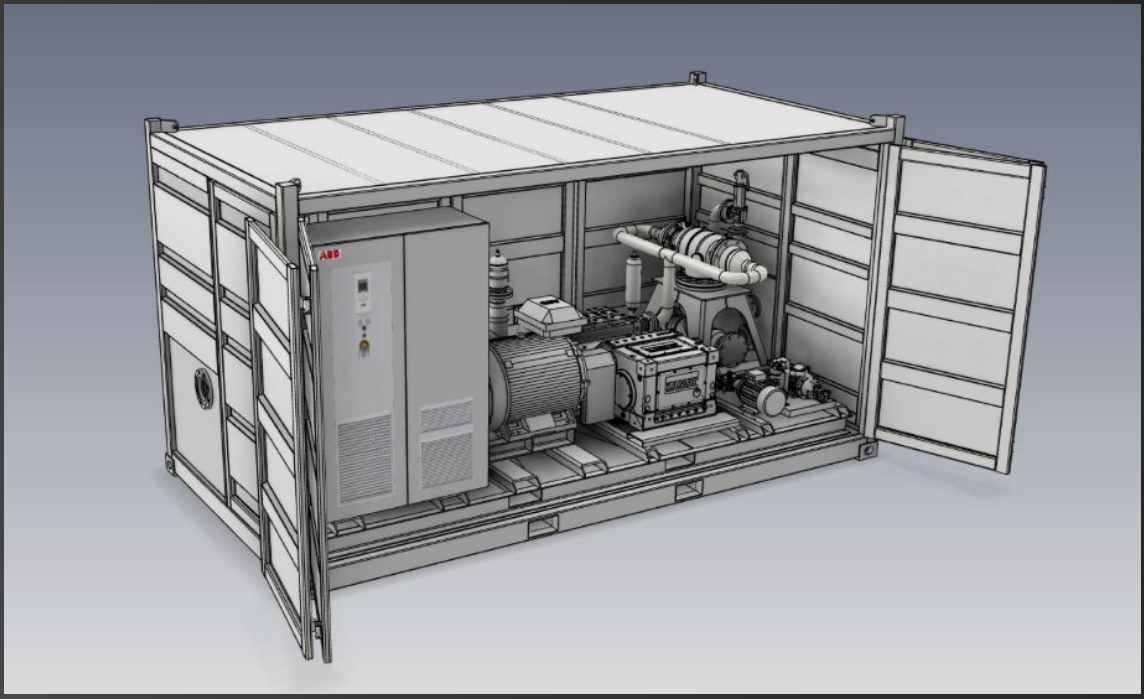

TECHNICAL SPECIFICATION

Max internal pressure	50-120 bar. Depending on configuration
Max outlet pressure:	10 bar
Max Kw	110-300 Kw. Depending on configuration
Power Source	Electrical with VFD or Diesel
Flow	1000 LPM
Inner tube material:	Wolfram carbide lined carbon steel / Ceramic
Weight Unit:	Depending on configuration. < 20000 Kg
Size:	Depending on configuration. 12-20fot
	50 bar @ 4800mmx2500x2500

WARNINGS AND HAZARDS

JAGTECH AS
Grønørveien 19, NO-7300 Orkanger, Norway
E-mail: post@jagtech.no
Phone: + 47 474 84 810
www.jagtech.no

JAGTECH

Preferred Technology Partner